DATA SHEET

Three Phase Induction Motor - Squirrel Cage

Customer	:

Product line	: W22Xd IE1 IIB T4	Product code :	12383202

Frame	: 71	Locked rotor time	: 12s (cold) 7s (hot)
Output	: 0.550 kW	Temperature rise	: 80 K
Poles	: 2	Duty cycle	: S1
Frequency	: 50 Hz	Ambient temperature	: -20°C to +40°C
Rated voltage	: 220/380 V	Altitude	: 1000 m.a.s.l.
Rated current	: 2.45/1.42 A	Protection degree	: IP56
L. R. Amperes	: 11.8/6.82 A	Cooling method	: IC411 - TEFC
LRC	: 4.8	Mounting	: B3T
No load current	: 1.38/0.800 A	Rotation¹	: Both (CW and CCW)
Rated speed	: 2780 rpm	Noise level²	: 56.0 dB(A)
Slip	: 7.33 %	Starting method	: Direct On Line
Rated torque	: 0.193 kgfm	Approx. weight³	: 20.4 kg
Locked rotor torque	: 200 %		
Breakdown torque	: 220 %		
Insulation class	: F		
Service factor	: 1.00		
Moment of inertia (J)	: 0.0004 kgm²		
Design	: N		

Output	50%	75%	100%
Efficiency (%)	65.4	70.0	70.0
Power Factor	0.61	0.76	0.84

Foundation loads	
Max. traction	: 7 kgf
Max. compression	: 27 kgf

		Drive end	Non drive end
Bearing type	:	6202 ZZ	6202 ZZ
Sealing	:	Oil Seal	Lip Seal
Lubrication interval	:	-	-
Lubricant amount	:	-	-
Lubricant type	:	Mobil Polyrex EM	

Notes

This revision replaces and cancel the previous one, which must be eliminated.
(1) Looking the motor from the shaft end.
(2) Measured at 1m and with tolerance of +3dB(A).
(3) Approximate weight subject to changes after manufacturing process.
(4) At 100% of full load.

These are average values based on tests with sinusoidal power supply, subject to the tolerances stipulated in IEC 60034-1.

Rev.	Changes Summary	Performed	Checked	Date

Performed by				
Checked by			Page	Revision
Date	21/11/2018		1 / 4	

This document is exclusive property of WEG S/A. Reprinting is not allowed without written authorization of WEG S/A.
Subject to change without notice

DATA SHEET

Three Phase Induction Motor - Squirrel Cage

Customer :

Thermal protection

ID	Application	Type	Quantity	Sensing Temperature
1	Winding	Thermistor - 2 wires	1 x Phase	150 ºC

Space heater information

Voltage: 200 - 240 V

Rev.	Changes Summary	Performed	Checked	Date

Performed by				
Checked by			Page	Revision
Date	21/11/2018		2 / 4	

This document is exclusive property of WEG S/A. Reprinting is not allowed without written authorization of WEG S/A.
Subject to change without notice

TORQUE AND CURRENT VS SPEED CURVE

Three Phase Induction Motor - Squirrel Cage

Customer	:		
Product line	: W22Xd IE1 Three-Phase	Product code :	12383202

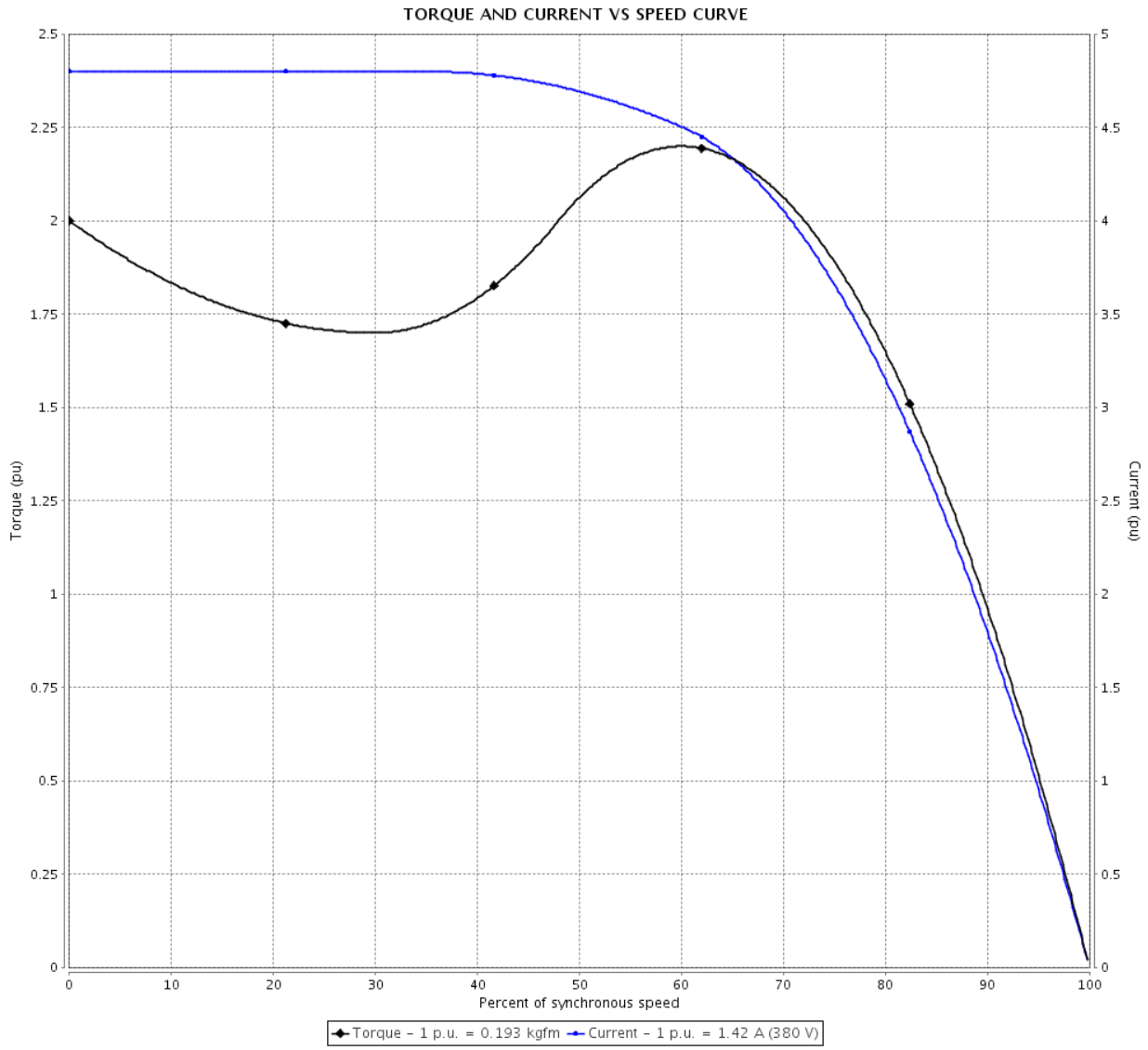

Performance	: 220/380 V 50 Hz 2P		
Rated current	: 2.45/1.42 A	Moment of inertia (J)	: 0.0004 kgm²
LRC	: 4.8	Duty cycle	: S1
Rated torque	: 0.193 kgfm	Insulation class	: F
Locked rotor torque	: 200 %	Service factor	: 1.00
Breakdown torque	: 220 %	Temperature rise	: 80 K
Rated speed	: 2780 rpm	Design	: N
Locked rotor time	: 12s (cold) 7s (hot)		

Rev.	Changes Summary	Performed	Checked	Date

Performed by				
Checked by			Page	Revision
Date	21/11/2018		3 / 4	

This document is exclusive property of WEG S/A. Reprinting is not allowed without written authorization of WEG S/A.
Subject to change without notice

LOAD PERFORMANCE CURVE

Three Phase Induction Motor - Squirrel Cage

Customer	:		
Product line	: W22Xd IE1 Three-Phase	Product code :	12383202

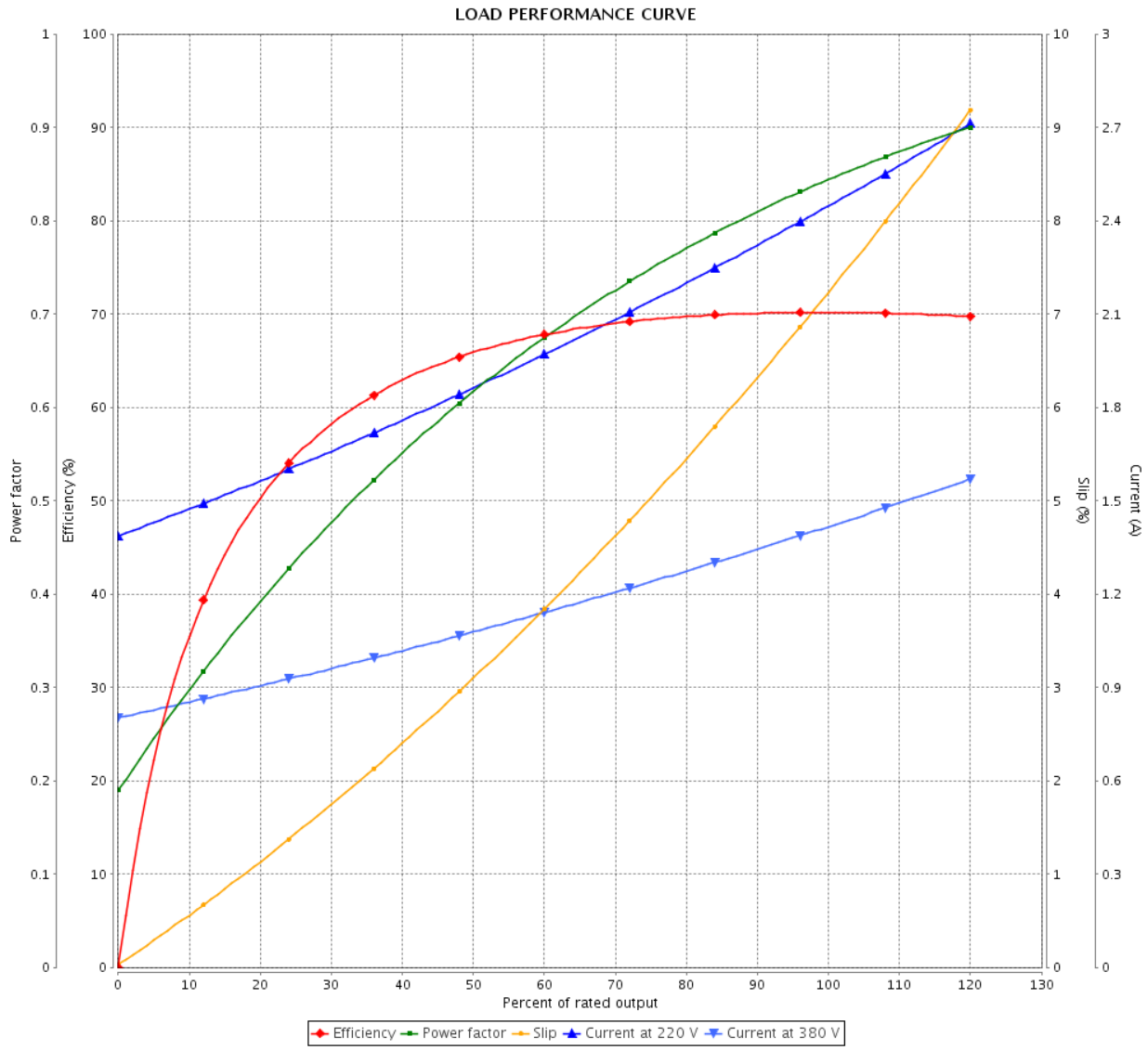

Performance	: 220/380 V 50 Hz 2P		
Rated current	: 2.45/1.42 A	Moment of inertia (J)	: 0.0004 kgm²
LRC	: 4.8	Duty cycle	: S1
Rated torque	: 0.193 kgfm	Insulation class	: F
Locked rotor torque	: 200 %	Service factor	: 1.00
Breakdown torque	: 220 %	Temperature rise	: 80 K
Rated speed	: 2780 rpm	Design	: N

Rev.	Changes Summary	Performed	Checked	Date

Performed by				
Checked by			Page	Revision
Date	21/11/2018		4 / 4	

This document is exclusive property of WEG S/A. Reprinting is not allowed without written authorization of WEG S/A.
Subject to change without notice

Dimensões em mm
Dimensions in mm

THIS IS AN UPDATED REVISION, THE PREVIOUS ONE MUST BE DISREGARDED.

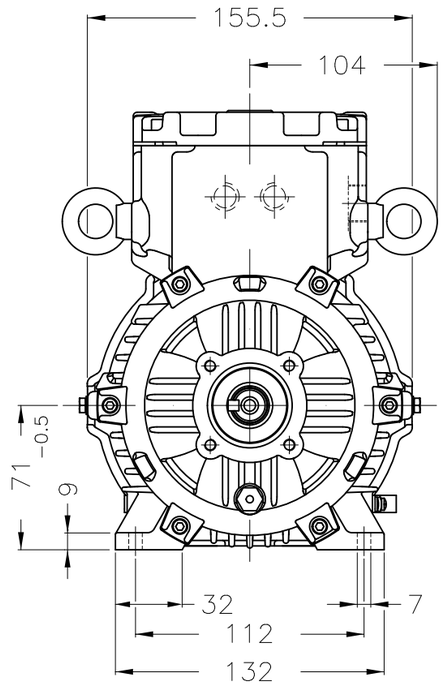

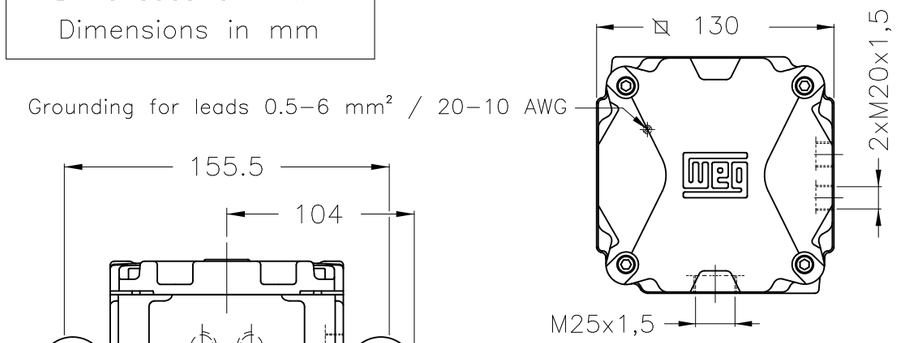

Main terminal box

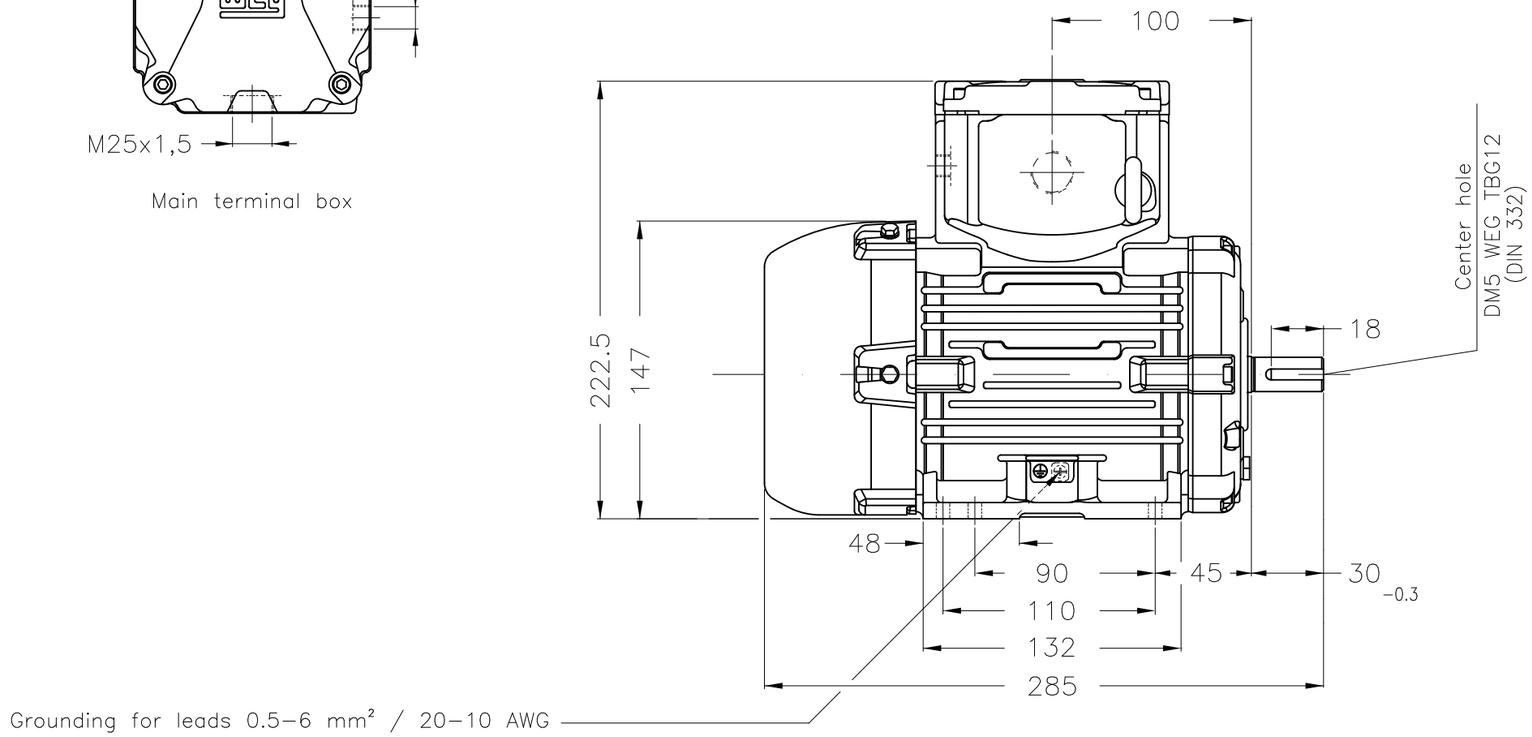

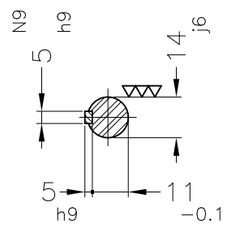

DE Shaft End

Color RAL 5009
Painting plan 205P
Mounting B3T

ECM	LOC	SUMMARY OF MODIFICATIONS	EXECUTED	CHECKED	RELEASED	DATE	VER

EXECUTED	USERADMIN	THREE PHASE MOTOR W22 EX-D	
CHECKED		FRAME 71 IP56 TEFC	
RELEASED		WEG code: 12383202	
REL DT	21.11.2018	WMO	Jaragua do Sul Product Engineering

SHEET 1 / 1

0.55 kW 02 Poles 50 Hz

A

ZME A3

WEG's property. Forbidden reproduction without previous authorization.